SPECIFICATION APPLIED

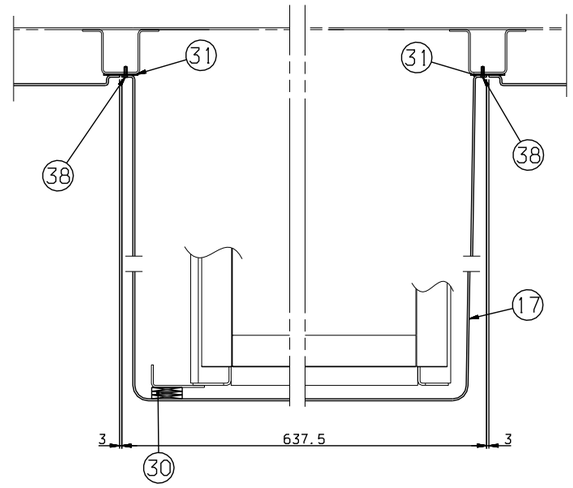

SECTION H-H
SCALE=1/3

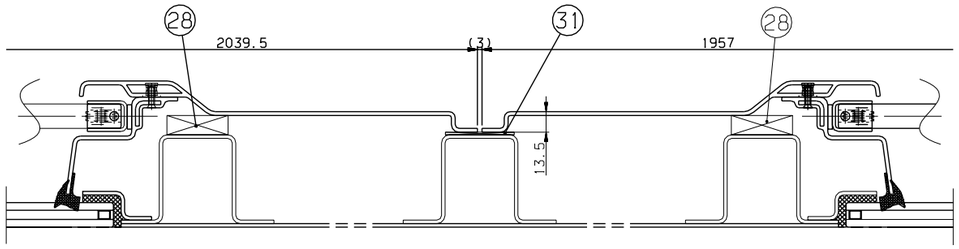

SECTION L-L
SCALE=1/2

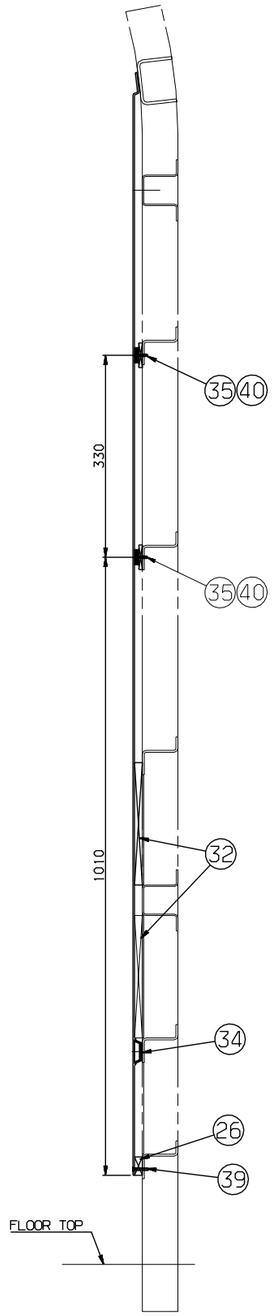

SECTION J-J
SCALE=1/5

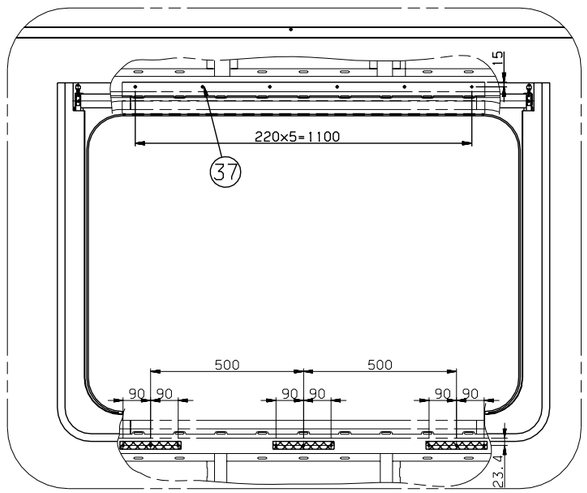

DETAIL K
SCALE=1/10

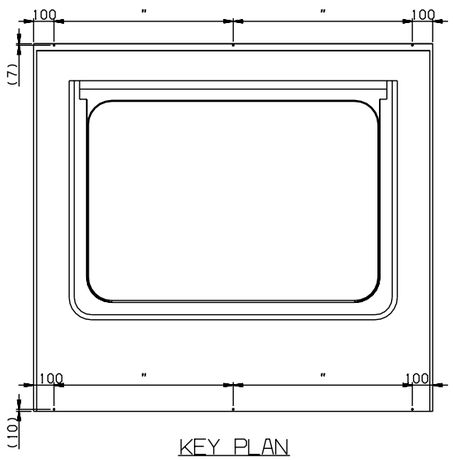

KEY PLAN
(WINDOW MASK FITTING)

NOTE
1. PACKING SHOULD BE BONDED TO FRAME AT THE CONTACT PLACE(PANEL/FRAME)
2. SIDE INTERIOR PANEL SHOULD BE FITTED WITH ADHESIVE BEFORE FIXED THE SCREW.
3. FIXING SCREW SHOULD BE MAINTAINED DISTANCE IN ORDER TO BE OUT OF SIGHT BY A MOLDING.
4. THE PACKING WHICH IS FITTED WITH ADHESIVE COULD BE ADJUSTABLE ACCORDING TO THE WIDTH AND THICKNESS.
5. THE MANUFACTURER SHOULD BE SUPPLIED THE INTERIOR PANEL ON THE CAR BASE WITH MARKED PART NO.

품번 NO.	부품 번호 PART NO.	품명 DESCRIPTION	재질 MATERIAL	수량 Q'TY	중량 W.T	비고 REMARKS
A 42	RFP53203EJ0	PANEL,MIDDLE CEILING,FITTING,T	ASSY	1		
A 41	RFP51412EJ0	PANEL,FUNNEL,TYPE D	ASSY	1		
40	RS60607-099S	SCREW,F.H	SUS304	168		M4x16
39	RS60607-101S	SCREW,F.H	SUS304	54		M4x25
38	RFP50003EJ0-038	SCREW,F.H	SUS304	32		M4x14 (HEAD=M3)
37	RS60607-097S	SCREW,F.H	SUS304	122		M4x12
36	RS60607-100S	SCREW,F.H	SUS304	72		M4x20
35	RFP50003EJ0-035	PACKING	CR	1		T5.7x40x40000 MS39000-004(SC70-F2(CR))
34	RFP50003EJ0-034	PACKING	CR	1		T2.2x30x38000 MS39000-004(SC70-F2(CR))
33	RFP50003EJ0-033	PACKING	CR	1		T3x30x1300 MS39000-004(SC70-F2(CR))
32	RFP50003EJ0-032	PACKING	CR	1		T12.7x200x3800 MS39000-004(SC70-F2(CR))
31	RFP50003EJ0-031	PACKING	CR	1		T1.7x40x42000 MS39000-004(SC70-F2(CR))
30	RFP50003EJ0-030	PACKING	CR	1		T5x40x23000 MS39000-004(SC70-F2(CR))
29	RFP50003EJ0-029	PACKING	CR	1		T2x30x38600 MS39000-004(SC70-F2(CR))
28	RFP50003EJ0-028	PACKING	CR	1		T12.7x40x65000 MS39000-004(SC70-F2(CR))
27	RFP50003EJ0-027	PACKING	CR	1		T2.2x85x38000 MS39000-004(SC70-F2(CR))
26	RFP50003EJ0-026	PACKING	CR	1		T12.7x30x38000 MS39000-004(SC70-F2(CR))
25	RFP55009EJ0	PANEL,FLUORESCENT,DECORATION,FITTING_T	ASSY	1		
24	RFP55003EJ0	PANEL,FLUORESCENT,FITTING_T	ASSY	1		
23	RFP54003EJ0	PANEL,CORNER,FITTING_T	ASSY	1		
B ~~22~~	~~RFP53009AN0~~	~~PANEL,MIDDLE CEILING,FITTING,M & T~~	~~ASSY~~	~~1~~		
21	RFP53003EJ0	PANEL,CEILING,FITTING_T	ASSY	1		
20	RFP50301EJ0	PANEL,COVER INDICATOR,FITTING	ASSY	1		
19	RFP50201EJ0	PANEL,COVER SPEAKER,FITTING	ASSY	1		
A ~~18~~	~~RFP50023AN0~~	~~PANEL,FUNNEL,TYPE D~~	~~ASSY~~	~~1~~		
17	RFP50102EJ0	PANEL,FUNNEL,TYPE F	ASSY	1		
16	RFP51194EJ0	WINDOW,MASK,TYPE JJ	ASSY	1		
15	RFP51193EJ0	WINDOW,MASK,TYPE II	ASSY	1		
14	RFP51192EJ0	WINDOW,MASK,TYPE HH	ASSY	1		
13	RFP51191EJ0	WINDOW,MASK,TYPE GG	ASSY	1		
12	RFP51138EJ0	WINDOW,MASK,TYPE KK	ASSY	2		
11	RFP51131EJ0	WINDOW,MASK,TYPE Z	ASSY	1		
10	RFP51130EJ0	WINDOW,MASK,TYPE Y	ASSY	1		
9	RFP51028AN0	WINDOW,MASK,TYPE W	ASSY	2		
8	RFP51127EJ0	WINDOW,MASK,TYPE V	ASSY	1		
7	RFP51126EJ0	WINDOW,MASK,TYPE U	ASSY	1		
6	RFP51125EJ0	WINDOW,MASK,TYPE T	ASSY	1		
5	RFP51124EJ0	WINDOW,MASK,TYPE S	ASSY	1		
4	RFP51123EJ0	WINDOW,MASK,TYPE R	ASSY	1		
3	RFP51122EJ0	WINDOW,MASK,TYPE O	ASSY	1		
2	RFP51021AN0	WINDOW,MASK,TYPE P	ASSY	1		
1	RFP51020AN0	WINDOW,MASK,TYPE O	ASSY	1		

주조 CASTING	~ 60	2	4
	~ 30	2	3
	~ 10	1	1.5
	< 3	0.5	1
길이 LENGTH	~3150	-	7
	~1600	4	5
	~ 800	3	4
	~ 400	2	3
	~ 200	1.5	2
	~ 100	1	1.5

등급 GRADE	A	B
주철, 주강품 CASTING (±)		
~ 20M	8	14	24
~ 15M	7	12	21
~ 12M	6	10	18
~ 8M	5	8	14
~ 4M	4	6	11
~ 2M	3	4	8
~ 1M	2	3	6
~ 315	1	2	4
~ 120	1	2	3
~ 30	1	1	1

등급 GRADE	A	B	C
용접 구조물 WELDING (±)			
~ 20M	-	6.0	8.0
~ 15M	-	5.0	7.0
~ 12M	-	4.0	6.0
~ 8M	-	3.0	5.0
~ 4M	0.8	2.0	4.0
~ 2M	0.5	1.2	3.0
~ 1M	0.3	0.8	2.0
~ 315	0.2	0.5	1.2
~ 120	0.15	0.3	0.8
~ 30	0.1	0.2	0.5
3 ~ 6	0.05	0.1	0.2

등급 GRADE	A	B	C
기계 가공품 MACHINING (±)			
규정없음 일반공차표 GENERAL TOLERANCE			

승인 APP	JeongYul Lee 2014.10.02	재질 MAT'L	ASSY
검도 CHK	KeongBong Park 2014.10.02	중량 G.W	
설계 DGN	HeonUk Lee 2014.10.02	일반공차 MC / WD / CT	B
제도 DRG	HeeSook Jeong 2014.10.02	SIZE	A1

명 칭 TITLE	INSTALLATION, INTERIOR PANEL T CAR (3/3)		
도면 번호 DRG. NO	MS	RFP50003EJ0	Ver. 00 / Rev. -B
SCALE 1/40	매수 SHEET 3 of 3		

RSD1402 / RFP- / 난-PRJT / 참리번호 CATIA

HYUNDAI Rotem 현대로템주식회사

참고도 REF. NO.

기호 MARK	일 자 DATE	변 경 내 용 DETAIL OF REVISION(E.C ZONE)	설변번호 E.C NO.	설계 DGN	검도 CHK	승인 APP
Bx3	2015.03.06	CHANGED ITEM (22 -> 42)	RSD1402-U095	H.U.LEE	J.W.BAE	H.G.RYU
Ax3	2015.02.09	CHANGED ITEM (18 -> 41)	RSD1402-U086	H.U.LEE	J.W.BAE	H.G.RYU

본 도면은 당사 재산권과 기밀이 함축되어 있으며, 무단복사/배포 금지됨. PROPERTY OF ISSUING ENTITY, CANNOT BE DISTRIBUTED OR REPRODUCED WITHOUT AUTHORIZATION.